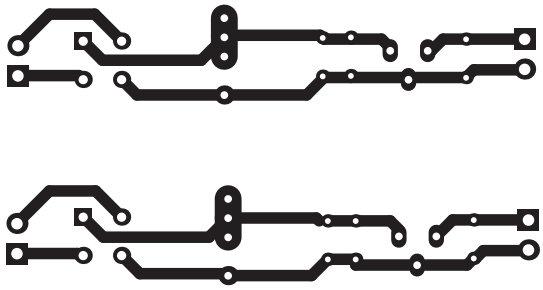

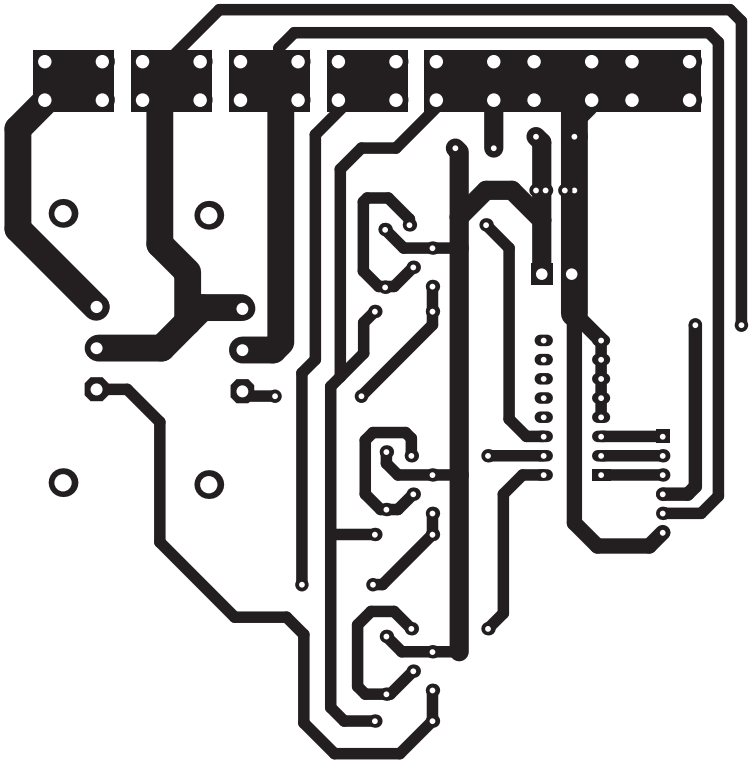

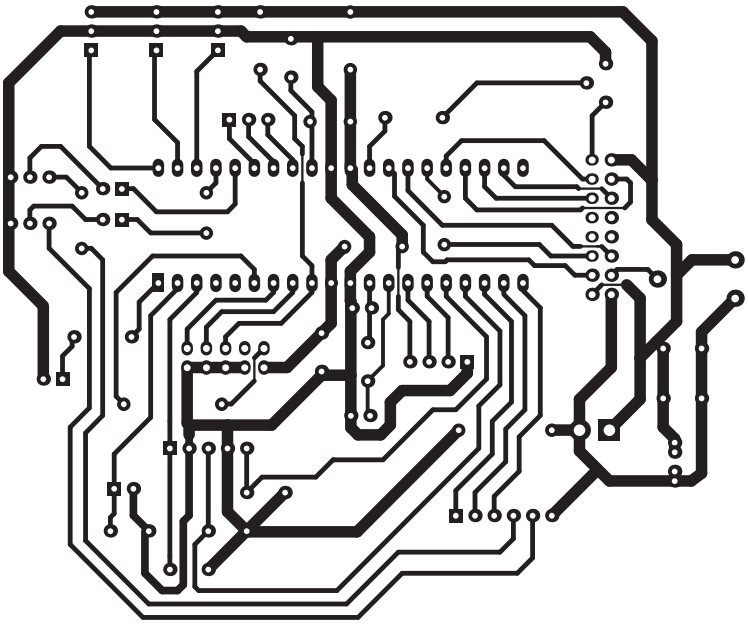

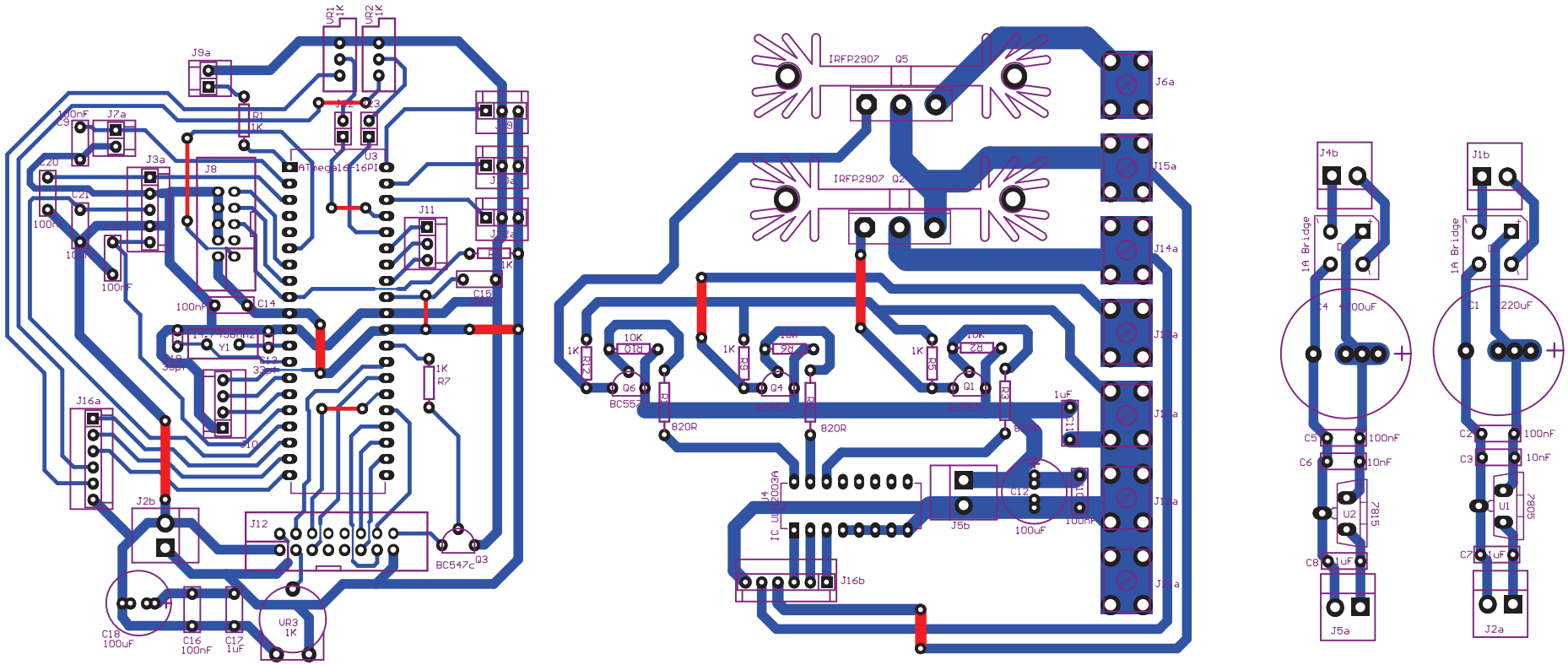
VR1 1K
VR2 1K
J9a
R1 1K
J7a
J3a
J8
U3
ATmega16-16PI
J11
C14
C15
Y1
R7
J16a
J2b
J12
BC547c
Q3
C18 100uF
C16 100nF
C17 1uF
VR3 1K
IRFP2907 Q5
IRFP2907 Q2
J6a
J15a
J14a
R12
R10
R9
R8
R6
R3
Q6
Q4
Q1
BC557
820R
820R
1uF
C11
J4
IC ULN2003A
J5b
C12
100uF
C10
100nF
J16b
J4b
J1b
1A Bridge
C4 100uF
C1 220uF
C5
C6
C2
C3
100nF
10nF
U2
7815
U1
7805
C8
C7
J5a
J2a

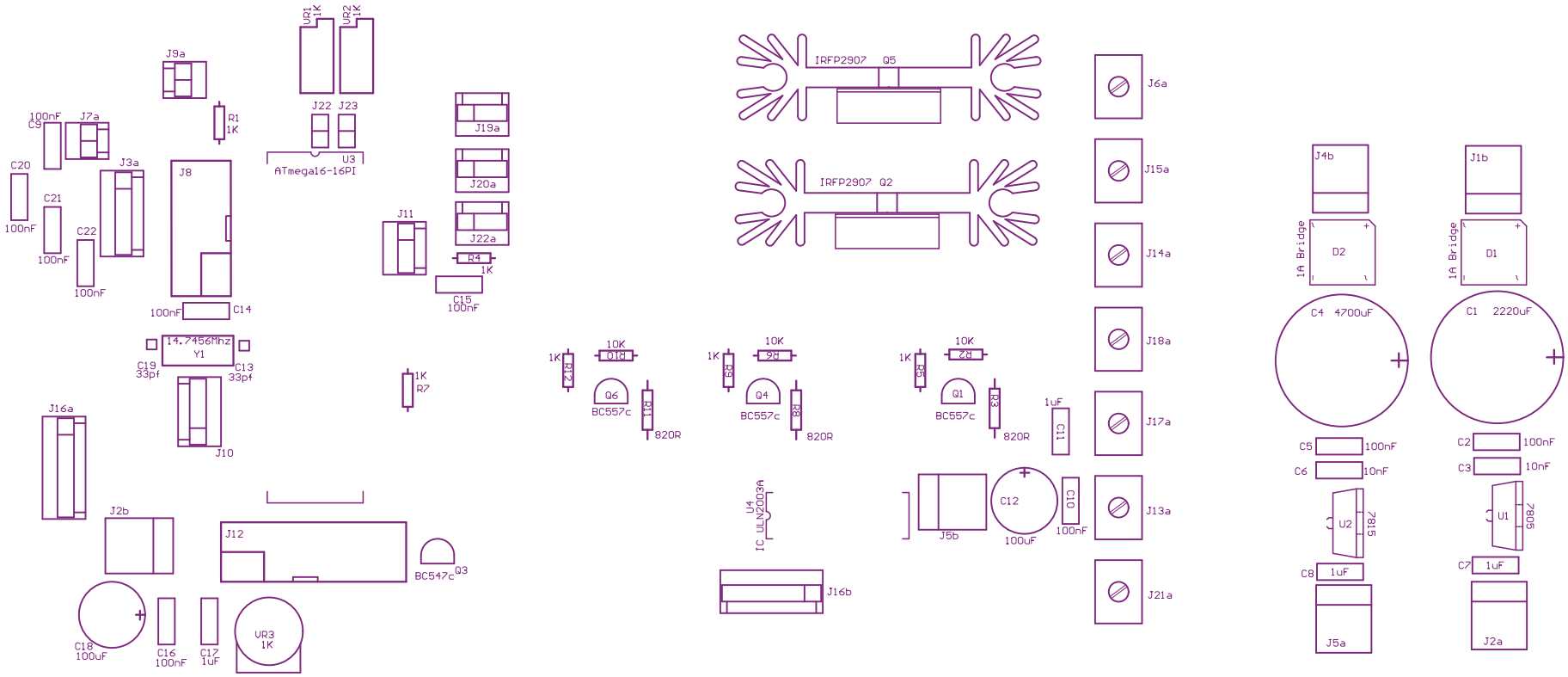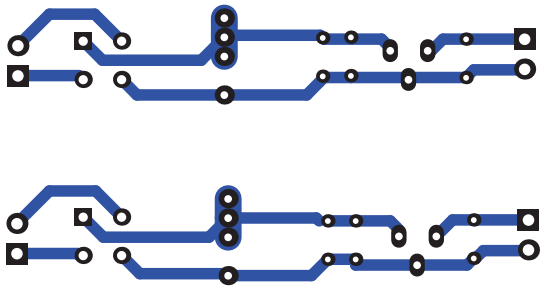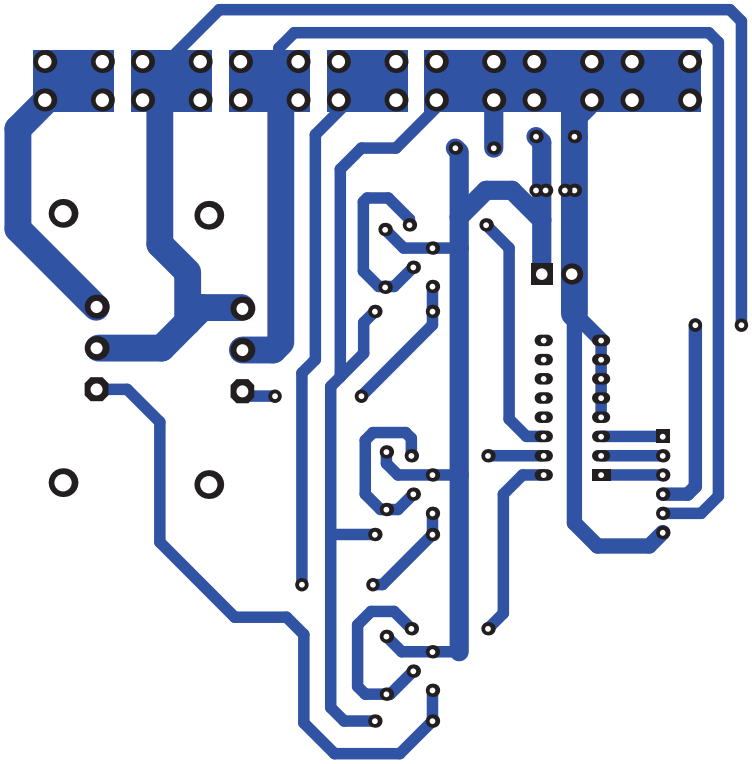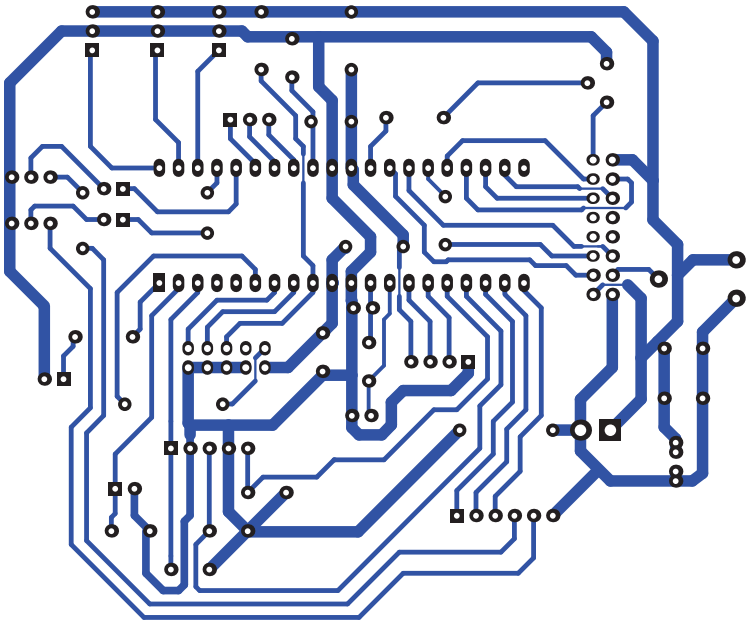
VR1 1K
VR2 1K
J9a
R1 1K
J22 J23
U3
ATmega16-16PI
J19a
J20a
J22a
J11
R4 1K
C15 100nF
100nF C9
J7a
C20 100nF
J3a
C21 100nF
C22 100nF
J8
100nF C14
14.7456Mhz Y1
C19 33pf
C13 33pf
J10
1K R7
J16a
J2b
J12
BC547c Q3
C18 100uF
C16 100nF
C17 1uF
VR3 1K
IRFP2907 Q5
IRFP2907 Q2
J6a
J15a
J14a
J18a
J17a
J13a
J21a
1K R12
10K R10
Q6 BC557c
R11 820R
1K R9
10K R6
Q4 BC557c
R8 820R
1K R5
10K R2
Q1 BC557c
R3 820R
1uF C11
U4 IC ULN2003A
J16b
J5b
C12 100uF
C10 100nF
J4b
1A Bridge D2
C4 4700uF
C5 100nF
C6 10nF
U2 7815
C8 1uF
J5a
J1b
1A Bridge D1
C1 2220uF
C2 100nF
C3 10nF
U1 7805
C7 1uF
J2a